CHANCE®
Programmable Resettable Sectionalizers

March 2014

Single-Phase Programmable Resettable Sectionalizers

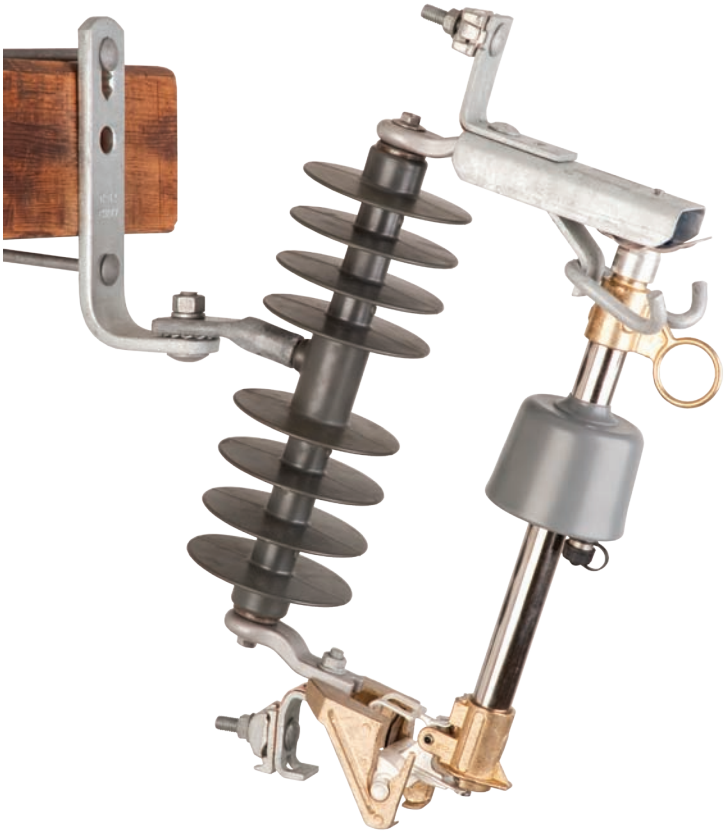

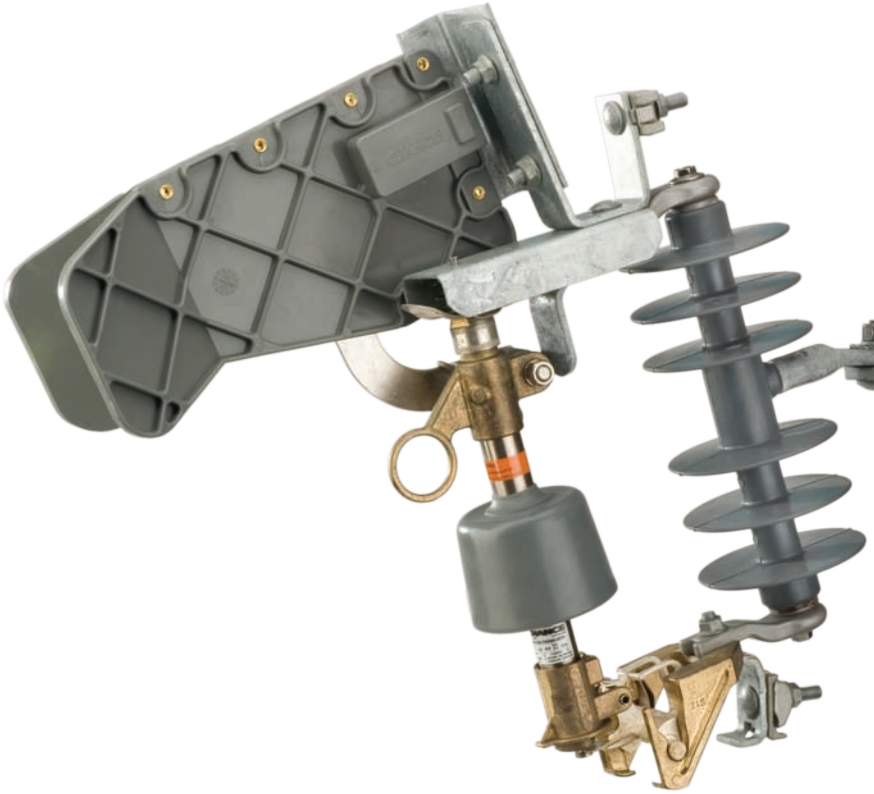

Type PRS Programmable Resettable Sectionalizer

The Programmable Resettable Sectionalizer (Type PRS) is a device which has built-in intelligence to discriminate between temporary (transient) and permanent faults on distribution systems. It operates in conjunction with a back-up automatic circuit recloser or a reclosing circuit breaker. It is specifically designed for the protection of single-phase lateral lines. When installed at the beginning of a lateral, it virtually eliminates nuisance outages. Its functional concept and design greatly improve system coordination.

Traditionally, the individual laterals are protected by expulsion-type fused cutouts. These cutouts are intended to operate only during a permanent fault on the lateral by carefully coordinating the fuse links with the time-current characteristics of the upstream automatic circuit recloser or reclosing circuit breaker. Unfortunately, coordination between fuse links and upstream automatic circuit reclosers is unachievable above a few thousand amperes. Coordination, if achieved on paper, can easily change as the fault current increases due to larger capacity facilities, addition of larger substations or reconductoring. Errors in re-fusing is another way that system coordination can be lost.

A sectionalizer is a protective device which has no time-current characteristics. With no fuse curve to intersect recloser time-current characteristics, the coordination range is extended to the maximum interrupting rating of the upstream protective device (Figure 1).

This practical function makes the sectionalizer an ideal device for application on single-phase laterals where available fault currents make coordination unachievable with fuses. Electronic resettable sectionalizers provide the utility with an economical and easily retrofittable method of enchancing protection of the distribution system. An electronic resettable sectionalizer installed at the start of a lateral, in place of a fuse, can greatly enhance system coordination service continuity and reliability at reduced costs.

The Type PRS electronic sectionalizer comprises two major components: A standard cutout mounting and an electronic module. The design and construction of the Type PRS are such as to enhance reliability and coordination of the distribution system. The electronic sectionalizer module fits into the standard mounting of a Chance Type C and S&C Type XS cutout. This interchangeability reduces the cost of retrofit installation.

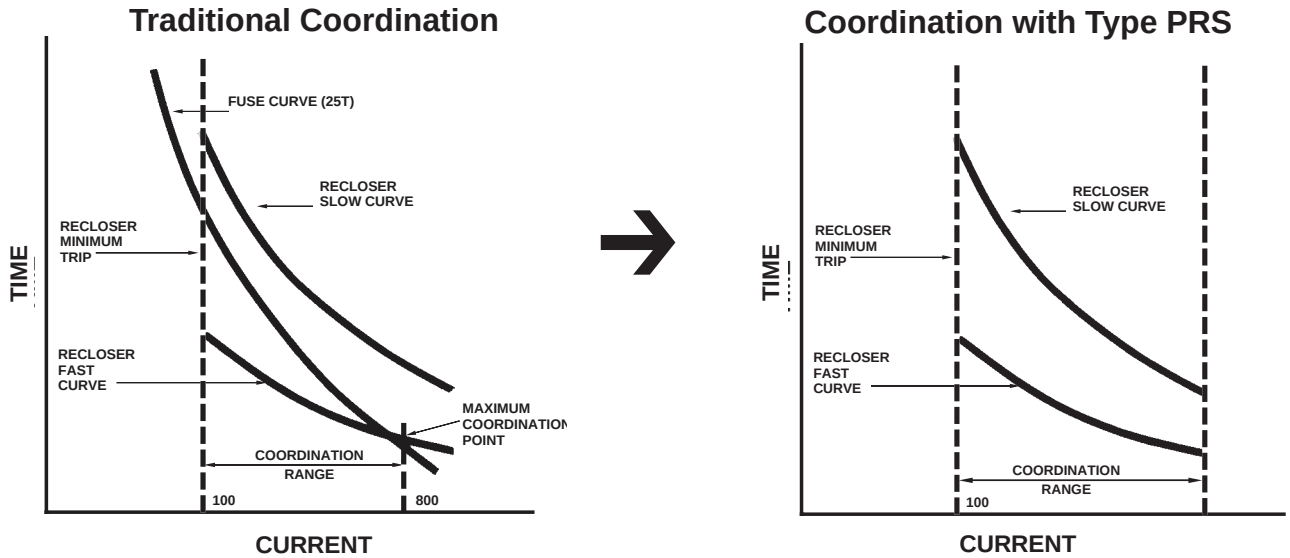

Figure 1. Addition of the CRS eliminates the fuse curve and extends the coordination range.

Application

The Type PRS electronic sectionalizer is best suited for use in the following applications:

- **Locations where fuse coordination is difficult to achieve**
- **Areas with insufficient load to justify investments in apparatus such as reclosers**
- **Remote locations prone to transient faults caused by fauna and/or flora**
- **SAIDI improvements**

Benefits

- **Improves system reliability**
- **Distinguishes between permanent and transient faults to reduce outages**
- **Programmable parameters: Counts, actuating current, reset time**
- **One programmable unit to meet all needs per specific voltage class**
- **Historical data storage for system overview and analysis**
- **Resettable**

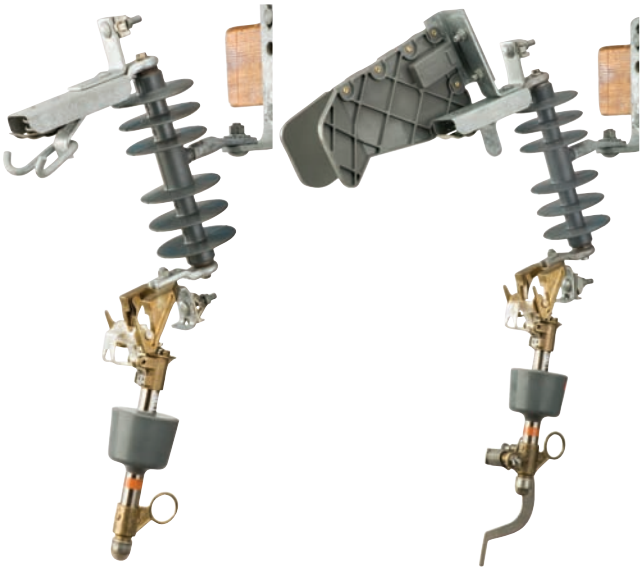

Drop-open operation is the same for both types of the PRS electronic sectionalizer: Standard (left) and Loadbreak (right, with Arc Chute interrupter). See following pages for specifications and ordering information.

Operation

The power required for the logic circuit of the Type PRS electronic sectionalizer is obtained from the built-in current transformer. When a fault occurs, which exceeds the minimum actuating current of the sectionalizer, the logic circuit will "power-up." The upstream recloser opens the circuit causing the line current to fall below the "dead line threshold." The logic circuit recognizes this as a "count" and stores this occurrence in its memory for two minutes. In doing so, the Type PRS merely counts the backup reclose operations.

After a predetermined number of such operations, the Type PRS isolates the circuit while the back-up recloser is in the open position. The recloser is then allowed to close, restoring service to the unfaulted sections of the system. If the fault is temporary and is cleared before the sectionalizer count reaches the predetermined number, the sectionalizer remains closed and resets to its original state after its reset time expires.

For Specifications, see following pages.

Type PRS Programmable Resettable Electronic Sectionalizer

System Voltage:

The sectionalizer must have a voltage rating equal to or greater than the system voltage.

Continuous Current:

The sectionalizer must have a continuous current rating equal to or greater than the anticipated system load current plus overload.

Where hydraulic reclosers are used, the continuous current rating of the sectionalizer is typically equal to the continuous current rating of the upstream automatic circuit recloser.

Minimum Actuating Current:

The minimum actuating current of sectionalizers should be 80% of the phase minimum trip of the source side single-phase automatic circuit recloser (ACR). Where three-phase reclosers or circuit breakers are used, a user may want to coordinate the sectionalizer's actuating current with the ground trip rating.

Where hydraulic reclosers are used, this is easily accomplished by matching the sectionalizer and the recloser's continuous current ratings. The sectionalizer's minimum actuating current is 160% of its continuous current rating and the hydraulic reclosers' phase pick-up is 200% of its continuous current rating (160/200=.80). (Table A).

Recloser	Typical Sectionalizer Ratings	
Minimum Trip, Amps	Minimum Actuating Current, Amps ± 10%	Continuous Current, Amps
30	24	15
50	40	25
70	56	35
100	80	50
140	112	70
200	160	100
280	224	140
400	320	200

Table A. Recloser/sectionalizer coordination.

Number of Counts:

The sectionalizer should be set to operate in at least one less count than the backup recloser. Example: a 4-shot recloser would require a maximum of a 3-count sectionalizer downstream (Figure 2, line A).

In case of a 2-fast/2-slow reclose setting, a 2-count sectionalizer may be used to reduce the number of recloser operations (Figure 2, line B).

Where sectionalizers are used in series, the downstream sectionalizer should have one less count than the upstream sectionalizer (Figure 3).

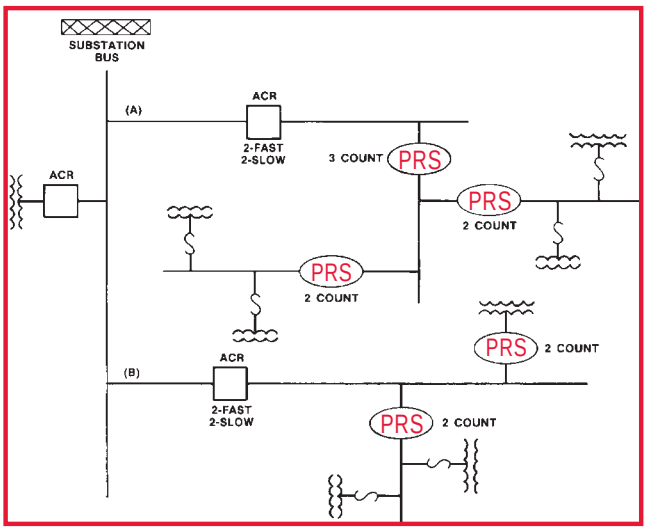

Figure 2. Typical distribution system with Type PRS two- and three-count electronic resettable sectionalizers.

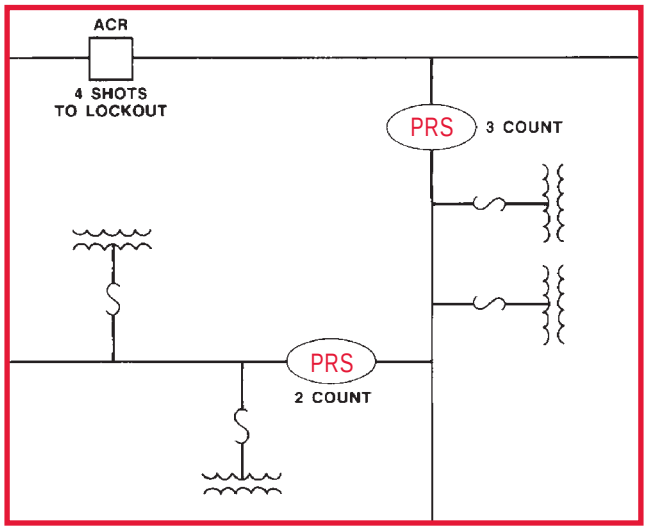

Figure 3. Coordination of sectionalizers in series.

Type PRS Programmable Resettable Electronic Sectionalizer

Technical Specifications

Rated Power Frequency	60 Hz/50 Hz
Rated Voltage (BIL)	15kV (110kV BIL) 27kV (125kV BIL) 38kV (150/170kV BIL)
Rated Continuous Current	300 Amps
Minimum Actuating Current	Programmable between 10 A and 480 A
Number of Counts:	Programmable for 1, 2, 3 or 4 counts
Reset time:	Programmable, 30 seconds to 300 seconds with resolution of 1 second
Inrush detection time	Less than 1 cycle
Types of inrush currents detected:	Symmetrical and Asymmetrical
Method of inrush currents detection:	Fourier Analysis (FFT)
Deadline detection:	Below 300 mA
Total execution time:	100 msec (± 20 msec)
Short time current withstand, 15 cycle:	8600 Amps Sym.
1 second:	4000 Amps Sym.
3 seconds:	3200 Amps Sym.
10 seconds:	2500 Amps Sym.
Momentary current rating:	12,000 Amps. Asym.
*Current measurement accuracy:	5%
Temperature range:	-40°C to +60°C
Maximum Thermal Rating:	300 A continuous current
Surge current withstand	65KA, per ANSI C37.63
Electromagnetic interference	per ANSI C37.63
Radio frequency interference	per ANSI C37.90.2
USB port	Rated IP68

* With 5% accuracy, if the unit is programmed for 50 A actuating current, then the unit will pick-up the count at 52.5 A and above but ignore a count at 47.5 A and below.

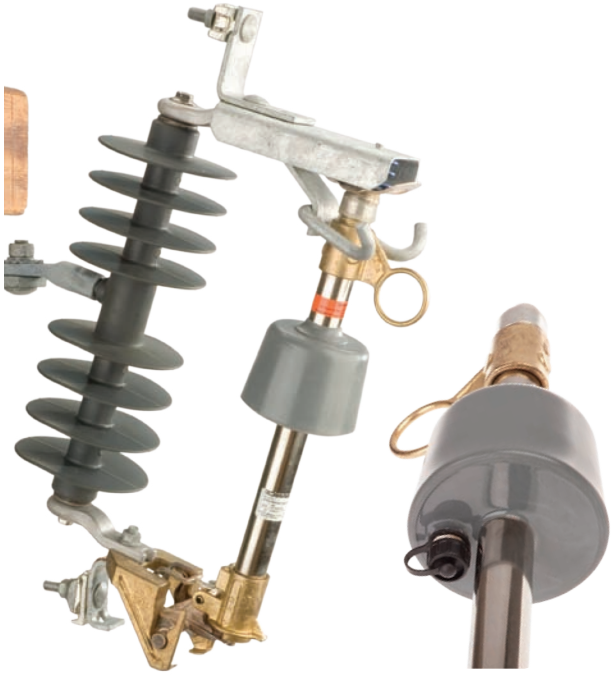

For Catalog Number System, see following pages.

Type PRS Programmable Resettable Electronic Sectionalizer

Programming

Programming of the unit has been simplified with the use of Hubbell's programming software package. Simply connect the USB cable provided into the USB port on the bottom of the unit and then into a computer with the provided software. Provide the inputs for the upstream device and the software will provide suggested settings which the user can accept or override.

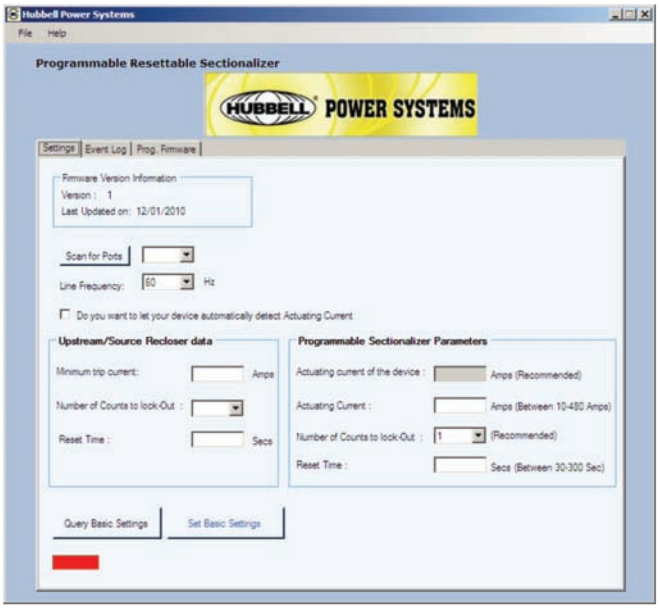

Event Log

The programmable sectionalizer contains onboard memory storage that will record the last 8 events the unit has seen. Users will be able to download the event log via the USB port and have access to the measured fault current, number of counts, and deadline current.

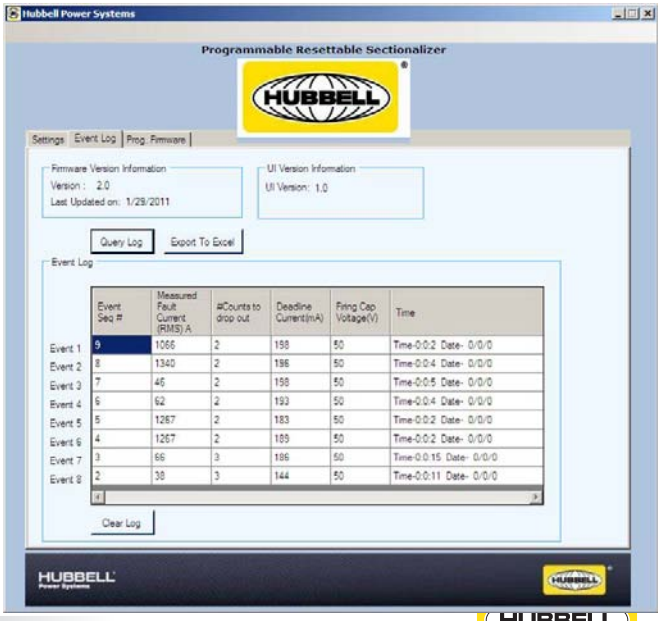

	Event Seq #	Measured Fault Current (RMS) A	#Counts to drop out	Deadline Current(mA)	Firing Cap Voltage(V)	Time
Event 1	9	1066	2	198	50	Time-0:0:2 Date- 0/0/0
Event 2	8	1340	2	196	50	Time-0:0:4 Date- 0/0/0
Event 3	7	46	2	198	50	Time-0:0:5 Date- 0/0/0
Event 4	6	62	2	193	50	Time-0:0:4 Date- 0/0/0
Event 5	5	1267	2	183	50	Time-0:0:2 Date- 0/0/0
Event 6	4	1267	2	189	50	Time-0:0:2 Date- 0/0/0
Event 7	3	66	3	186	50	Time-0:0:15 Date- 0/0/0
Event 8	2	38	3	144	50	Time-0:0:11 Date- 0/0/0

Type PRS Programmable Resettable Electronic Sectionalizer

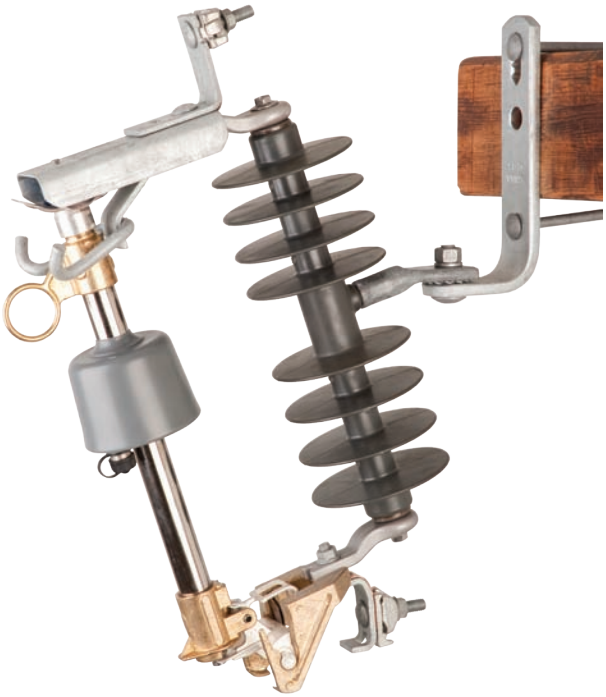

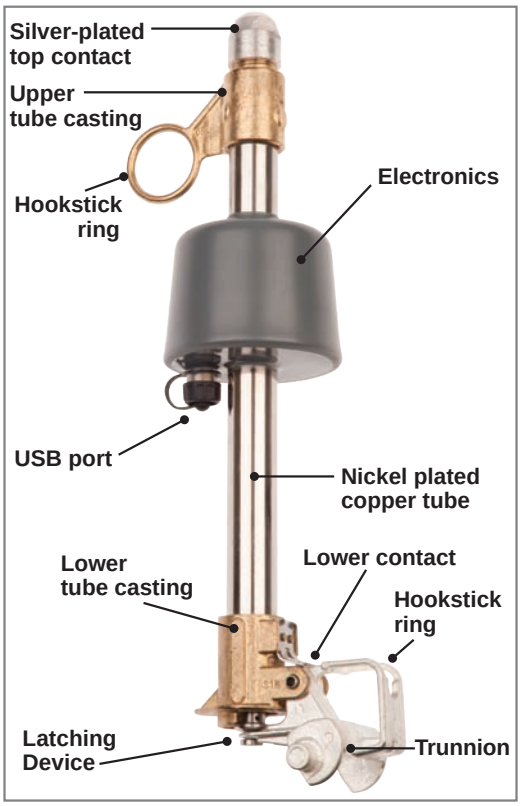

POLYMER Cutout Catalog Number System

Position 3: Cutout Type
4 = Non-Loadbreak
5 = Loadbreak

Position 9: Cutout Terminal Connectors
P = Parallel-groove
E = Small eyebolt
L = Large eyebolt
T = Electronic Module Only

Position 12: [OPTIONAL] Programmed Counts

Number of Counts	Catalog No. Designation
1	A
2	B
3	C

USB Cable
Cat. No. PSC7400177
(must order separately)

CP7	4	00	1	PP	L	B	G	A

Position 6: Cutout Insulation Level
1 = 15kV, 110kV BIL
2 = 27kV, 125kV BIL (Non-loadbreak only)
15/27kV, 125kV BIL (Loadbreak only)

Position 10: Cutout Bracket
Z = No bracket
B = NEMA B bracket
D = D bracket
X = Extended bracket
Blank = Electronic Module Only
V = Easy-On Bracket

Position 11: [OPTIONAL] Programmed Actuating Current

Continuous Current (Amp)	Actuating Current (Amp)	Catalog No. Designation
15	24	G
25	40	H
35	56	J
50	80	K
70	112	L
100	160	M
140	224	N
200	320	P

Examples:
- To order 27kV Polymer cutout programmable sectionalizer with extended bracket and large eyebolt connectors = CP74002PPLX.
- To order 27kV programmable sectionalizer module only = C74002PPT.

†To order programmable sectionalizer module only, replace "CP7" with "C7" followed by selections for Positions 3 through 9.

Note: Position 11, Position 12 are optional and can be left blank if the PRS is not wished to be pre-programmed.

Type PRS Programmable Resettable Electronic Sectionalizer

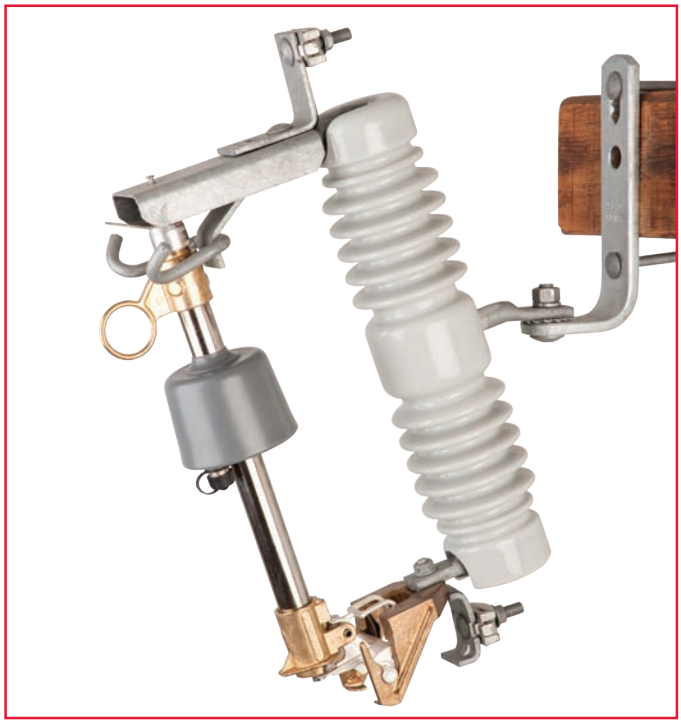

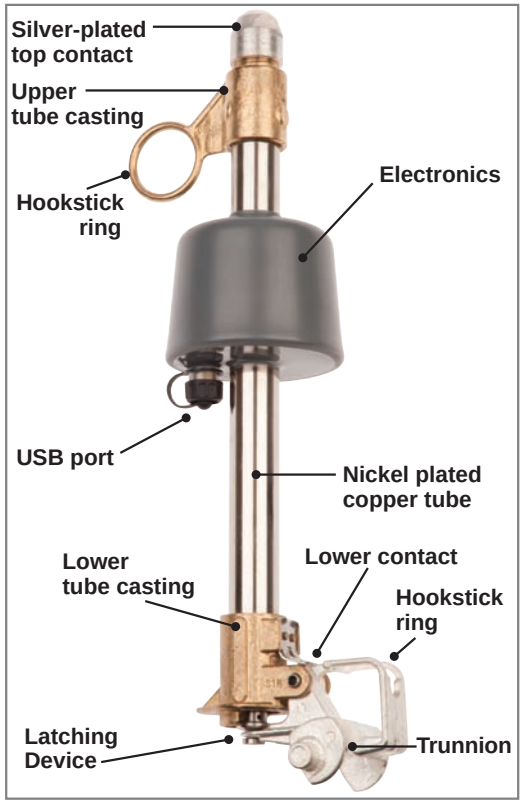

PORCELAIN Cutout Catalog Number System

Position 3: Cutout Type
4 = Non-Loadbreak
5 = Loadbreak

Position 9: Cutout Terminal Connectors
P = Parallel-groove
E = Small eyebolt
L = Large eyebolt
T = Electronic Module Only

Position 12: [OPTIONAL] Programmed Counts

Number of Counts	Catalog No. Designation
1	A
2	B
3	C

USB Cable
Cat. No. PSC7400177
(must order separately)

C7	4	00	1	PP	L	B	G	A

Position 6: Cutout Insulation Level
1 = 15kV, 110kV BIL
2 = 27kV, 125kV BIL (Non-loadbreak only)
15/27kV, 125kV BIL (Loadbreak only)
3 = 38kV, 150kV BIL (Non-loadbreak only)
6 = 38kV, 170kV BIL (Non-loadbreak only)

Position 10: Cutout Bracket
Z = No bracket
B = NEMA B bracket
D = D bracket
X = Extended bracket
Blank = Electronic Module Only
V = Easy-On Bracket

Position 11: [OPTIONAL] Programmed Actuating Current

Continuous Current (Amp)	Actuating Current (Amp)	Catalog No. Designation
15	24	G
25	40	H
35	56	J
50	80	K
70	112	L
100	160	M
140	224	N
200	320	P

Examples:
To order 38kV, 170kV BIL Porcelain cutout programmable sectionalizer with large eyebolt connectors and extended bracket = C74006PPLX.

To order 38kV, 170kV BIL programmable sectionalizer module only = C74006PPT.

Note: Position 11, Position 12 are optional and can be left blank if the PRS is not wished to be pre-programmed.

Accessories

Terminal Connectors

Catalog No.	Description	Wt. (lb./kg.)	Min. Order Qty.
T7001325	Parallel-Groove Clamp, tin-plated bronze for No. 6 solid thru 4/0 ACSR or 250 kcmil stranded	0.33 / 0.15	10
T7001326	Small Eyebolt for No. 8 solid thru 2/0 stranded	0.16 / 0.07	10
T7001327	Large Eyebolt for No. 6 solid thru 4/0 ACSR or 250 kcmil stranded	0.40 / 0.14	10

Mounting Brackets

C2060283	NEMA Heavy Duty "B" Bracket with $1\frac{1}{2}$" captive bolt for crossarm mounting	2.84 / 1.29	—
C2060280	Extended Crossarm Bracket (Horizontal section is $2\frac{5}{8}$" longer than NEMA "B" bracket)	3.75 / 1.70	—
C2060299	"D" Pole Mounting Bracket	7.67 / 3.48	—
C2060632	Cutout/Arrester Bracket complete with carriage bolts and backstrap	4.00 / 1.81	—
PSC2060887	"V" Easy-On Bracket for Crossarm Height range: $4\frac{1}{8}$" to $5\frac{5}{32}$", Crossarm Width range: $2\frac{3}{4}$" to 4"	2.9/ 1.32	

Mounting Bracket Dimensions

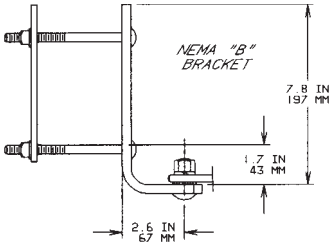

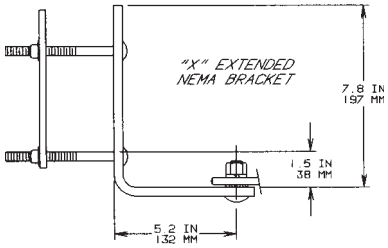

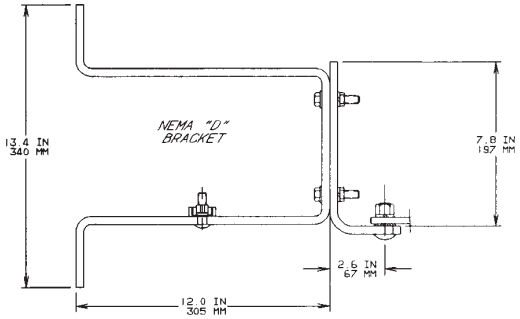

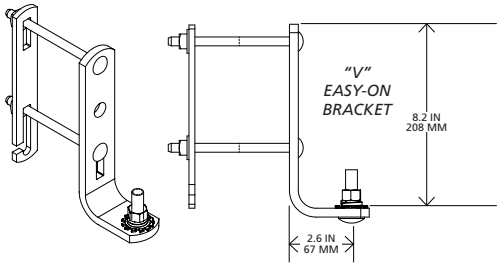

Universal Cutout Tool

Ideal for use with Standard Electronic Sectionalizer to easily lift out, place, *open and close. Inverted, secure method also fits 100 amp fuse holders of ABB, Chance, S&C cutouts.

Cat. No. **PSC4033484** (Wt. 4 oz.)
See Tools Catalog Section 2100.

**When opening a cutout, follow all work rules and OSHA regulations.*
Not for use with Loadbreak cutouts.

Three-Phase Programmable Resettable Sectionalizers

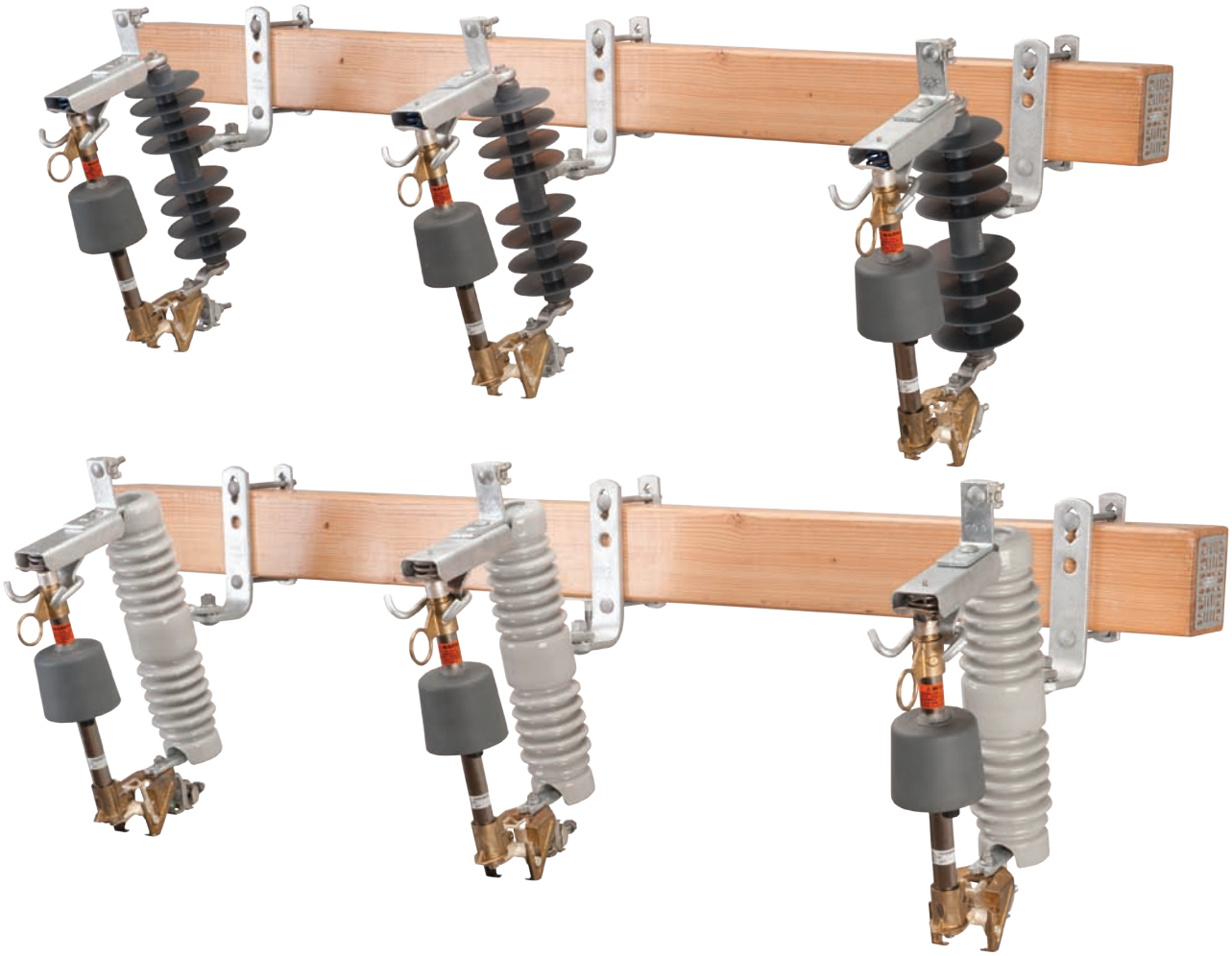

Three-Phase Programmable Resettable Sectionalizer

The Three-Phase Programmable Resettable Sectionalizer (3Ø PRS) is a device which has built-in intelligence to discriminate between temporary (transient) and permanent faults on three-phase distribution systems. It operates in conjunction with a three-phase gang-operated automatic recloser. It is specifically designed for the protection of three-phase lateral lines. When installed at the beginning of the laterals, it virtually eliminates nuisance outages. Its functional concept and design greatly improve system coordination.

Traditionally, three-phase systems are protected by expulsion-type fused cutouts. These cutouts are intended to operate only during a permanent fault on the lateral by careful selection of fuse links to coordinate with an upstream three-phase automatic recloser or a three-phase circuit breaker. Unfortunately, proper coordination between fuse links and upstream three-phase recloser is unachievable above a few thousand amperes. Coordination, if achieved on paper can easily change as fault current increases due to larger capacity facilities, addition of larger substations or reconductoring. Errors in re-fusing is another way that three-phase system coordination can be lost.

The 3Ø PRS is a protective device designed to automatically sectionalize faults synchronously on all the three phases of a three-phase distribution system. Since the 3Ø PRS doesn't need time-current characteristics for its operation, the coordination range is extended to the maximum interrupting rating of the three-phase upstream protective device (Figure 1).

This difference in functionality makes the 3Ø PRS an ideal device for application on three-phase distribution laterals where available fault currents make recloser-fuse coordination unachievable. The synchronous operation of the 3Ø PRS also prevents three-phase imbalance. As the 3Ø PRS is programmable and resettable, it provides the utility with an economical and easy to retrofit method of enhancing protection of the distribution system.

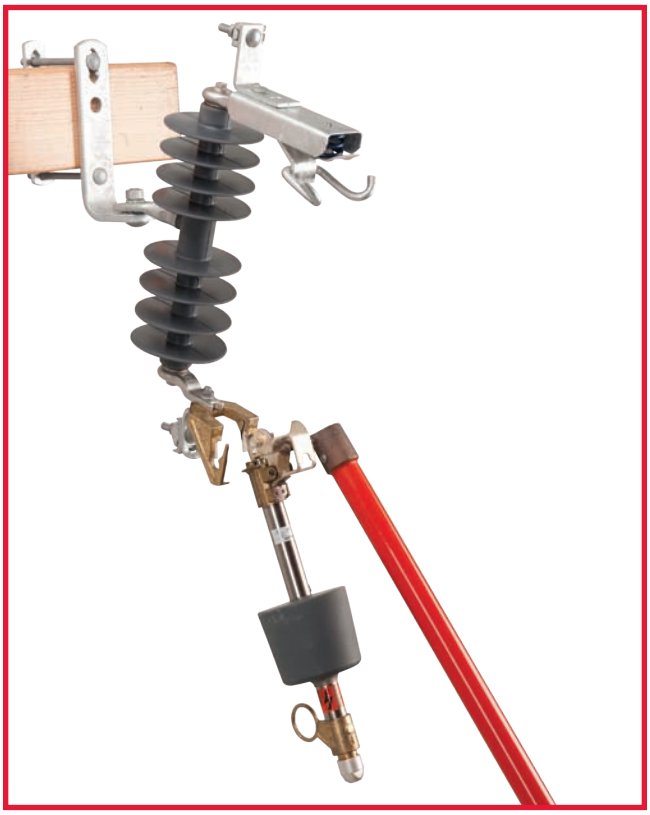

The 3Ø PRS comprises three cutout mountings and three electronic modules with no mechanical link between the three units. The three electronic modules are integrated with 2.4GHz RF transceivers. The communication range is up to 20 feet (open air). A synchronous drop-out is achieved by all of the three 3Ø PRS units when a permanent fault is seen by any of the three units. The 3Ø PRS modules fit into the standard mounting of the Chance Type C, S&C (MPS) Type XS and ABB Type ICX cutout. This interchangeability reduces the cost of retrofit installation.

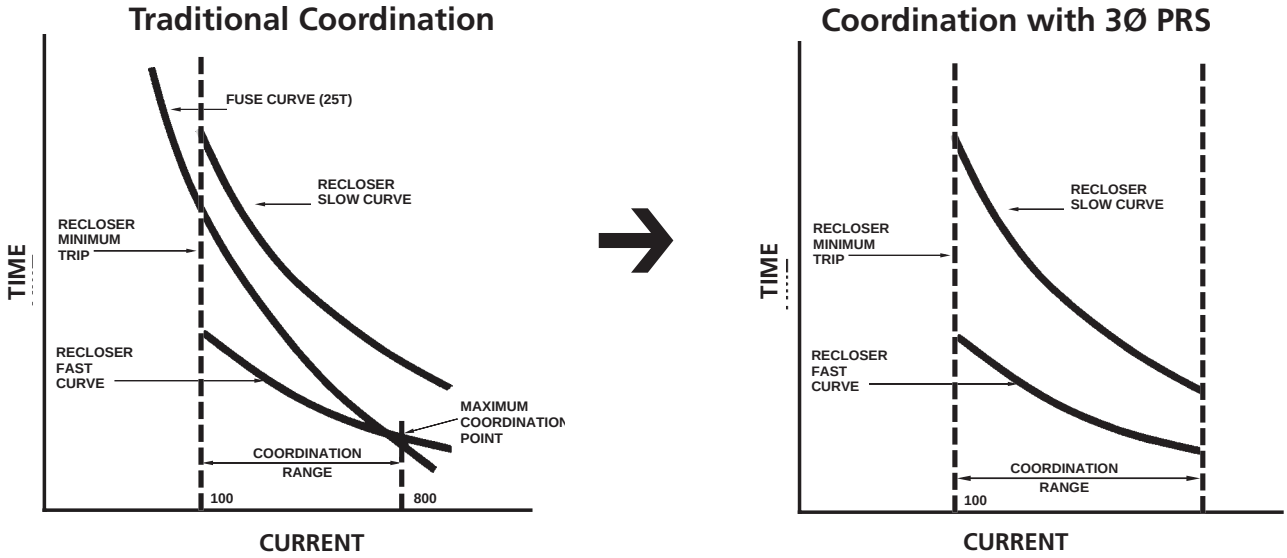

Figure 1. Addition of the 3Ø PRS eliminates the fuse curve and extends the coordination range.

Application

The 3Ø PRS is best suited for use in the following applications:

- **Locations where fuse coordination is difficult to achieve**
- **Areas with insufficient load to justify investments in apparatus such as reclosers**
- **Remote locations prone to frequent faults caused by fauna and/or flora**

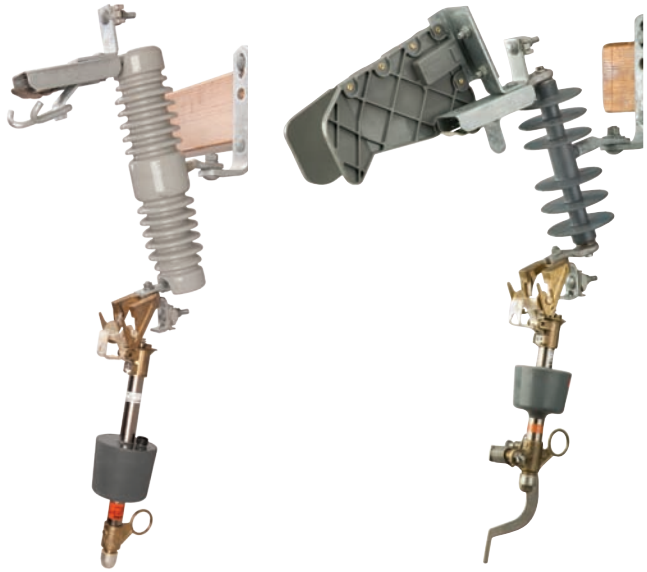

Drop-open operation is the same for both types of the 3Ø PRS: Standard (left) and Loadbreak (right, with Arc Chute interrupter). See following pages for specifications and ordering information.

Benefits

- **SAIDI improvements**
- **Distinguishes between permanent and transient faults to reduce outages**
- **Three programmable units meet all needs per specific voltage class reducing inventory**
- **Historical data storage, report generation for system overview and analysis**
- **Ability to record and track total number of the blinks on the line from the date of installation.**
- **Resettable , no consumable parts**

Operation

The three modules of the 3Ø PRS are programmed to maintain a constant radio link when all the units are powered by the line current through the built in current transformer on each unit.

Each unit can detect fault current when the line current exceeds the programmed actuating current. The unit will sense the subsequent open circuit ("dead-line") condition caused by the upstream recloser acting on the fault current. This event is registered as a "count".

If the fault is temporary and cleared before the "count" reaches the programmed "count", the unit does not operate and after the reset time expires, the "count" is reset. If the fault is permanent, the unit will see multiple instances of fault current followed by recloser opening and in each instance, the "count" will be incremented.

After detecting the programmed number of "counts", the unit (detecting the fault) will use the radio link to command the other two units in the set to drop open. The radio signal communication and acknowledgement process is completed within 30 msec and upon receiving a positive acknowledgement from all units in the set, all 3 units will drop open within 20 msec of each other. Thus, all 3 phases of the faulted section will be isolated synchronously while the upstream recloser is in the open position, maintaining 3-phase system balance.

For Specifications, see following pages.

Three-Phase Programmable Resettable Sectionalizer

System Voltage:

The sectionalizer must have a voltage rating equal to or greater than the system voltage.

Continuous Current:

The sectionalizer must have a continuous current rating equal to or greater than the anticipated system load current plus overload.

Where hydraulic reclosers are used, the continuous current rating of the sectionalizer is typically equal to the continuous current rating of the upstream automatic circuit recloser.

Minimum Actuating Current:

The minimum actuating current of sectionalizers should be 80% of the phase minimum trip of the source side single-phase automatic circuit recloser (ACR). Where three-phase reclosers or circuit breakers are used, a user may want to coordinate the sectionalizer's actuating current with the ground trip rating.

Where hydraulic reclosers are used, this is easily accomplished by matching the sectionalizer and the recloser's continuous current ratings. The sectionalizer's minimum actuating current is 160% of its continuous current rating and the hydraulic reclosers' phase pick-up is 200% of its continuous current rating (160/200=.80). (Table A).

Recloser	Typical Sectionalizer Ratings	
Minimum Trip, Amps	Minimum Actuating Current, Amps ± 10%	Continuous Current, Amps
30	24	15
50	40	25
70	56	35
100	80	50
140	112	70
200	160	100
280	224	140
400	320	200

Table A. Recloser/sectionalizer coordination.

Deadline Current Threshold:

The deadline current threshold is the current the 3Ø PRS unit should see to send a drop open signal to the other two 3Ø PRS units after the unit has reached its programmed number of counts. The device verifies that the current on the line is below the programmed deadline current threshold for 80ms before the synchronous trip signal is sent.

Number of Counts:

The sectionalizer should be set to operate in at least one less count than the backup recloser. Example: a 4-shot recloser would require a maximum of a 3-count sectionalizer downstream (Figure 2, line A).

In case of a 2-fast/2-slow reclose setting, a 2-count sectionalizer may be used to reduce the number of recloser operations (Figure 2, line B).

Where sectionalizers are used in series, the downstream sectionalizer should have one less count than the upstream sectionalizer (Figure 3).

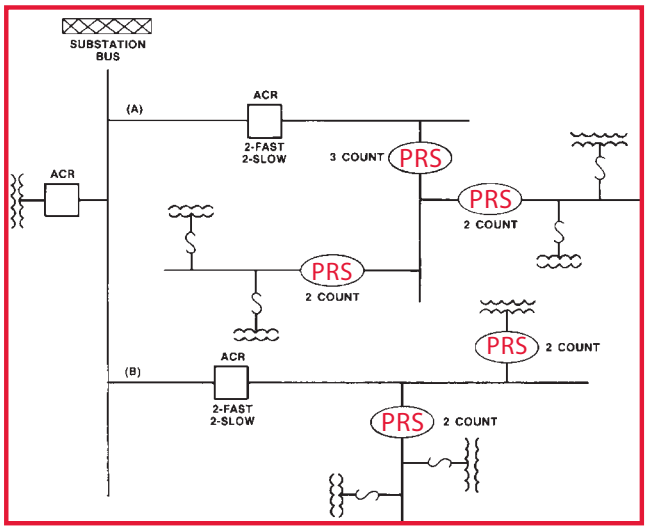

Figure 2. Typical distribution system with Type PRS two- and three-count electronic resettable sectionalizers.

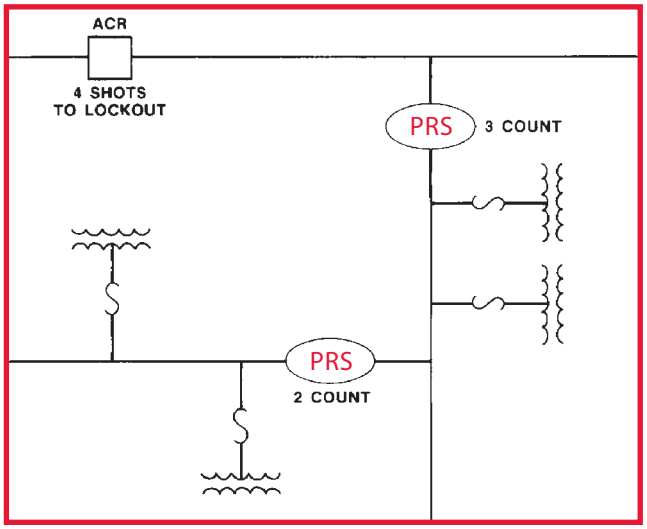

Figure 3. Coordination of sectionalizers in series.

Three-Phase Programmable Resettable Sectionalizer

Technical Specifications

Rated Power Frequency	60 Hz/50 Hz
Rated Voltage (BIL)	15kV (110kV BIL) 27kV (125kV BIL) 38kV (150/170kV BIL)
Rated Continuous Current	300 Amps
Minimum Actuating Current	Programmable between 16 A and 480 A
Number of Counts:	Programmable for 1, 2, 3 or 4 counts
Reset time:	Programmable, 30 seconds to 300 seconds with resolution of 1 second
Inrush detection time	Less than 1 cycle
Types of inrush currents detected:	Symmetrical and Asymmetrical
Method of inrush currents detection:	Fourier Analysis (FFT)
Deadline detection:	Programmable between 0.2A to 8A
Total execution time:	130 msec (± 20 msec)
Short time current withstand, 15 cycle: 1 second: 3 seconds: 10 seconds:	 8600 Amps Sym. 4000 Amps Sym. 3200 Amps Sym. 2500 Amps Sym.
Momentary current rating:	12,000 Amps. Asym.
*Current measurement accuracy:	5%
Temperature range:	-40°C to +60°C
Maximum Thermal Rating:	300 A continuous current
Surge current withstand	65KA, per ANSI C37.63
Electromagnetic interference	per ANSI C37.90.2
USB port	Rated IP68

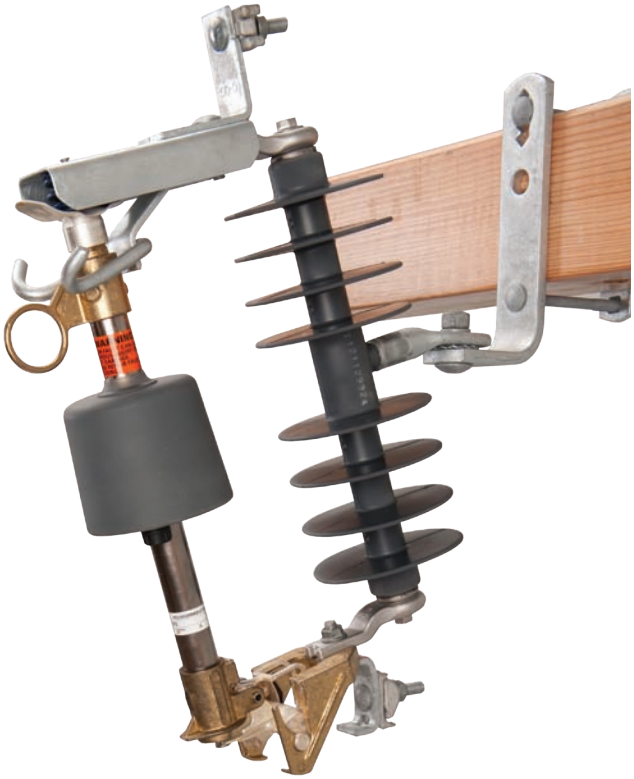

* With 5% accuracy, if the unit is programmed for 50 A actuating current, then the unit will pick-up the count at 52.5 A and above but ignore a count at 47.5 A and below.

For Catalog Number System, see following pages.

Three-Phase Programmable Resettable Sectionalizer

Programming

Programming of the 3Ø PRS units has been simplified with the use of Three Phase Programmable Resettable Sectionalizer programming software. Simply connect the USB hub to the USB port of the computer and then connect the three USB ports on the bottom of the 3Ø PRS units to the connected USB hub. Identify the devices by running the software. Enter the programmable parameters on the settings page. Each unit can be assigned its own Phase and Asset ID's. User can finish programming the three units connected by clicking Write Settings to Sectionalizer.

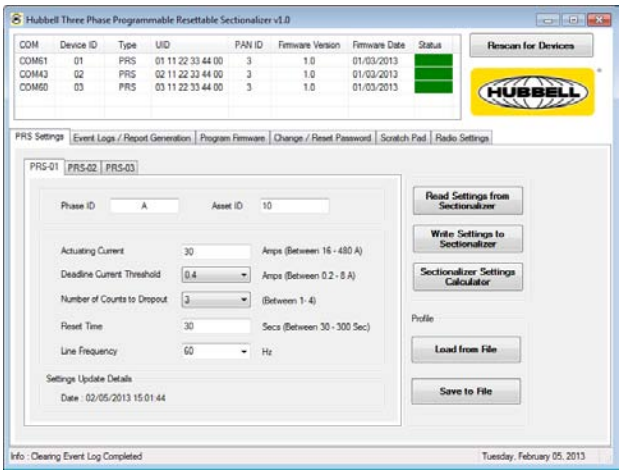

Event Log

The 3Ø PRS contains onboard memory storage that records blinks as well as open operations on the line. The event log supports 40 events. Users will be able to download the event log when connected to unit via the USB cable and have access to the measured fault current, number of counts, blink number, cumulative blinks, drop open events and deadline current.

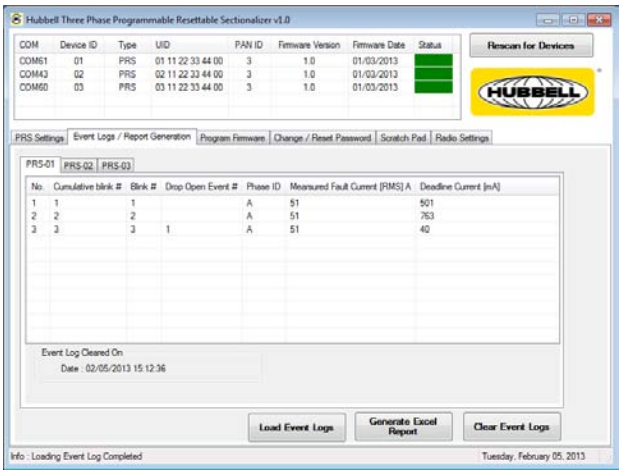

Three-Phase Programmable Resettable Sectionalizer

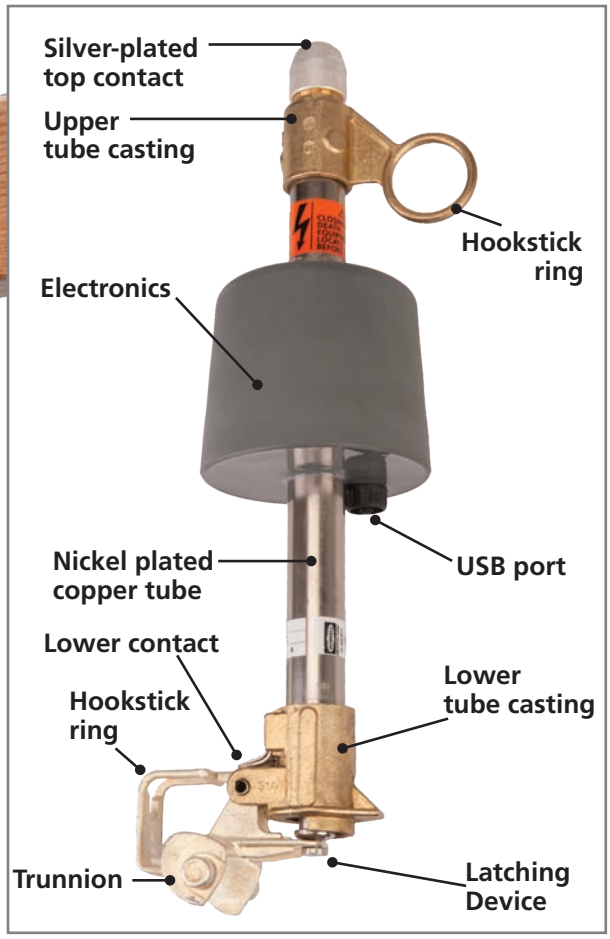

POLYMER Cutout
Catalog Number System

Position 3:
Cutout Type
4 = Non-Loadbreak
5 = Loadbreak

Position 9:
Cutout Terminal Connectors
P = Parallel-groove
E = Small eyebolt
L = Large eyebolt
†**T** = Electronic Module Only

CP7	4	10	1	PP	L	B

Position 6:
Cutout Insulation Level
1 = 15kV, 110kV BIL
2 = 27kV, 125kV BIL (Non-loadbreak only)
15/27kV, 125kV BIL (Loadbreak only)

Position 10:
Cutout Bracket
Z = No bracket
B = NEMA B bracket
D = D bracket
X = Extended bracket
Blank = Electronic Module Only
V = Easy-On Bracket

Examples:
- To order 27kV Polymer cutout programmable sectionalizer with extended bracket and large eyebolt connectors = CP74102PPLX.
- To order 27kV programmable sectionalizer module only = C74102PPT.

†To order programmable sectionalizer module only, replace "CP7" with "C7" followed by selections for Positions 3 through 9.

3 USB Cables and 1 USB hub
Cat. No. PSC7410021
(must order separately)

Universal Cutout Tool

Ideal for use with Standard Electronic Sectionalizer to easily lift out, place, *open and close. Inverted, secure method also fits 100 amp fuse holders of ABB, Chance, S&C cutouts.

Cat. No. **PSC4033484** (Wt. 4 oz.)
See Tools Catalog Section 2100.

**When opening a cutout, follow all work rules and OSHA regulations.*
Not for use with Loadbreak cutouts.

Three-Phase Programmable Resettable Sectionalizer

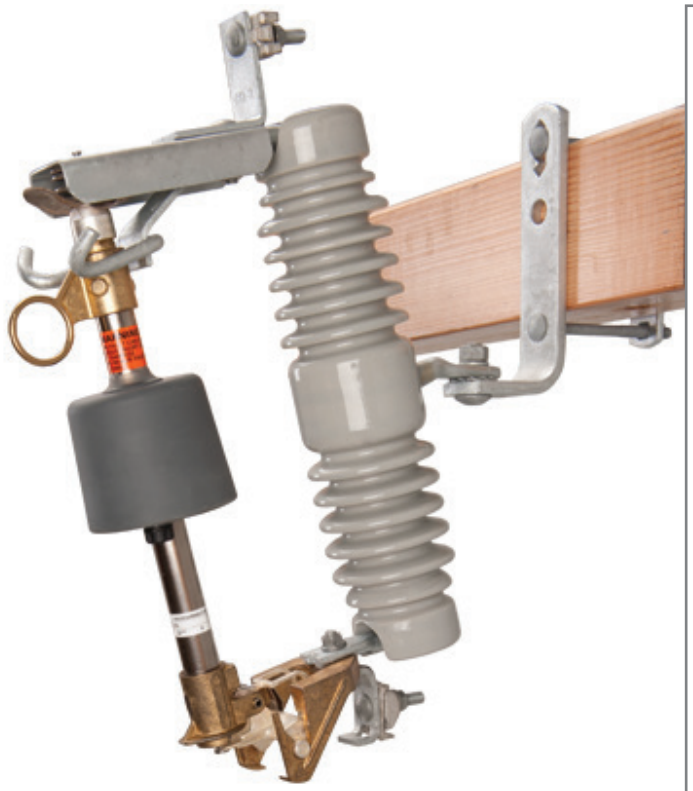

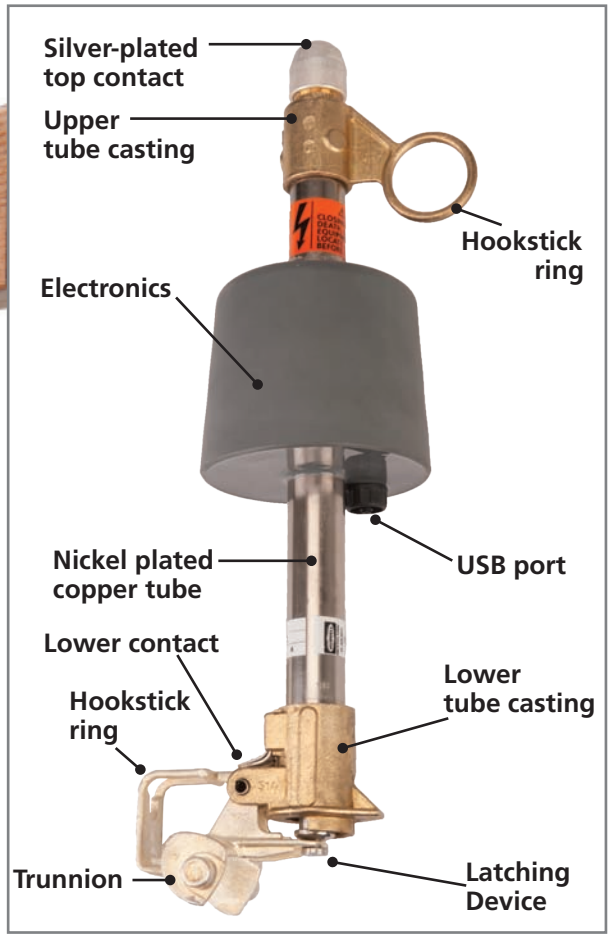

PORCELAIN Cutout
Catalog Number System

Position 3:
Cutout Type
4 = Non-Loadbreak
5 = Loadbreak

Position 9:
Cutout Terminal Connectors
P = Parallel-groove
E = Small eyebolt
L = Large eyebolt
T = Electronic Module Only

C7	4	10	1	PP	L	B

Position 6:
Cutout Insulation Level
1 = 15kV, 110kV BIL
2 = 27kV, 125kV BIL (Non-loadbreak only)
15/27kV, 125kV BIL (Loadbreak only)
3 = 38kV, 150kV BIL (Non-loadbreak only)
6 = 38kV, 170kV BIL (Non-loadbreak only)

Position 10:
Cutout Bracket
Z = No bracket
B = NEMA B bracket
D = D bracket
X = Extended bracket
Blank = Electronic Module Only
V = Easy-On Bracket

3 USB Cables and 1 USB hub
Cat. No. PSC7410021
(must order separately)

Universal Cutout Tool
Ideal for use with Standard Electronic Sectionalizer to easily lift out, place, *open and close. Inverted, secure method also fits 100 amp fuse holders of ABB, Chance, S&C cutouts.

Cat. No. **PSC4033484** (Wt. 4 oz.)
See Tools Catalog Section 2100.

**When opening a cutout, follow all work rules and OSHA regulations.*
Not for use with Loadbreak cutouts.

Examples:
To order 38kV, 170kV BIL Porcelain cutout programmable sectionalizer with extended bracket and large eyebolt connectors = C74106PPLX.

To order 38kV, 170kV BIL programmable sectionalizer module only = C74106PPT.

Accessories

Terminal Connectors

Catalog No.	Description	Wt. (lb./kg.)	Min. Order Qty.
T7001325	Parallel-Groove Clamp, tin-plated bronze for No. 6 solid thru 4/0 ACSR or 250 kcmil stranded	0.33 / 0.15	10
T7001326	Small Eyebolt for No. 8 solid thru 2/0 stranded	0.16 / 0.07	10
T7001327	Large Eyebolt for No. 6 solid thru 4/0 ACSR or 250 kcmil stranded	0.40 / 0.14	10

Mounting Brackets

C2060283	NEMA Heavy Duty "B" Bracket with $1^{1}/_{2}$" captive bolt for crossarm mounting	2.84 / 1.29	—
C2060280	Extended Crossarm Bracket (Horizontal section is $2^{5}/_{8}$" longer than NEMA "B" bracket)	3.75 / 1.70	—
C2060299	"D" Pole Mounting Bracket	7.67 / 3.48	—
C2060632	Cutout/Arrester Bracket complete with carriage bolts and backstrap	4.00 / 1.81	—
PSC2060887	"V" Easy-On Bracket for Crossarm Height range: $4^{1}/_{8}$" to $5^{5}/_{32}$", Crossarm Width range: $2^{3}/_{4}$" to 4"	2.9/ 1.32	

Mounting Bracket Dimensions

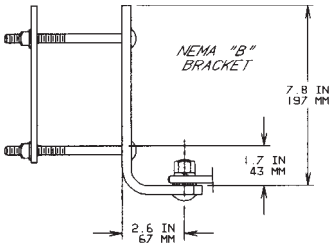

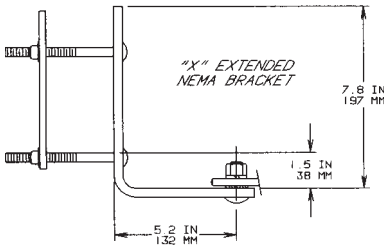

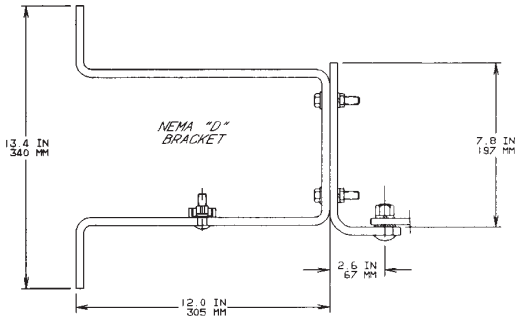

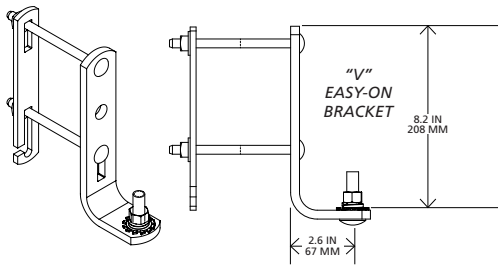

NOTES

NOTES

HUBBELL®
Power Systems, Inc.

• 8100 Churchill Avenue • Leeds, Alabama 35094 • (205) 699-0840

NOTICE: For the latest revision of our Catalog and Literature, click here or visit our web site: *www.hubbellpowersystems.com*

CA_10_001E

NEVER COMPROMISE™

www.hubbellpowersystems.com

MARCH 2014